SAO, SAG LUBRICATION UNIT

Instructional manual

CONTENT

1 PRODUCT DESIGNATION

This document serves as a guide for proper handling, storage, installation, commissioning, operation and maintenance of the product:

SAO/SAG lubrication unit

This is a standard product. Individual products are identified by a production label, which shows the code designation, year of manufacture and serial number.

2 APPLICATION

SAO lubrication units, version for lubricating oils, and SAG, version for soft greases, are used exclusively as pressure lubricant sources for single-pipe central lubrication circuits, which are equipped with single-pipe metering valves series SKIE, SKIB and SKIC using SRK manifolds or single-pipe metering valves series SMIE, SMIB mounted directly in the lubricated place.

3 DESCRIPTION

The main parts of the unit are a plastic tank and tank lid, on which the main components of the unit are mounted, which are a gear pump with electric motor, float level meter for SAO units, diaphragm level meter for SAG units with electric switch, filling neck with filling network and outlet fitting with manometer. Manometer only at the customer's request. There are a change-over, relief, and safety valve on the plastic gear pump holder.

In addition, some types of lubrication units (SAO P3, P4, P5, SAG P3, P4, P5) are available with an internal pressure switch or pressure switch and automatic control (SAO P2, P4, SAG P2, P4). The tank lid is closed with a plastic cover. For lubrication units equipped with automatic control, there is a manual button on the front of the tank lid to start one lubrication time and 3 signalling LEDs. The individual indicators indicate: green light - connected voltage, yellow light - unit running, red light flashing - lack of lubricant in the tanks (lubricant pressure level has dropped below the permitted minimum), red light is constantly lit - during the lubrication period there was no work cycle lubrication circuit (pressure switch did not turn on).

SAO, SAG lubrication units are units in a variant design, with a plastic fuel tank with an optional volume of 3 or 6 litres. The nominal supplied amount of lubricant is uniform 100 cm^3 / min for all unit designs, with a maximum working pressure of 24 bar (SAO) and 30 bar (SAG). Electric motors are standardly supplied in 115 V AC, 230 V AC and 24 V DC single-phase, other voltages consult the supplier.

4 OPERATION

After getting operation of the lubrication unit, the gear pump, driven by an electric motor, carries the lubricant in the relief valve, in which the piston moves and closes the discharge opening. The lubricant pressure in the change-over valve increases, where the working cuff moves and closes its drain hole. The entire lubrication circuit is now closed and the lubricant starts to flow around the sealing edge of the working rubber cuff of the change-over valve into the lubrication circuit, and all the metering valves in the circuit perform their stroke and deliver the lubricant to the lubricated points. When the gear pump is stopped, the relief valve spring moves its piston, which opens the drain hole. The pressure in the change-over valve drops, the working cuff opens the drain hole, through which part of the oil escapes from the lubrication circuit back into the tank and the pressure in the circuit drops. After the pressure drop in the circuit, the closing rubber cuffs in the single-pipe metering valves are released,

the dispensing pistons pressed by the springs are moved to the initial position while the oil is moved to the space above the dispensing pistons. This completes one lubrication of lubricated points, i.e., one lubrication cycle. After restarting the electric motor, the above procedure will be repeated.

5 TECHNICAL DATE

Table 1 Technical date

Maximum pressure		30 bar
Working pressure		24 bar - SAO
		30 bar - SAG
Relief pressure		approx.1 bar
Nominal flow rate		100 cm^3 / min.
Oil tank volume		3, 6 dm^3
Operation period		5 to 90 s.
Pause period		1 to 1000 min., 1 to 21 hours
		2 to 2520 impulse
Number of outlets		1
Connecting pipe union		M12x1 mm, for tube outside dia. 6, (8) mm
Electric Motor		115 V AC, 1,50 A, 50/60 Hz, 110 W 230 V AC, 0,75 A, 50/60 Hz, 110 W 24 V DC, 1,5 A, 30 W
Protection		IP 33
Nominal voltage of level indicator	oil	250 V AC, 150 V DC, 1,5 A
	grease	10 - 40 V DC, 0,2 A
Lubricant	oil	min. 50 $mm^2.s^{-1}$
	grease	NLGI 000, 00
Working environment temperature		0 to 60 ^{0}C
Weight		3,5 kg

6 CATALOGUE DESCRIPTION

SAO 3P1, SAO 6P1, SAG 3P1, SAG 6P1
A variant without control timer and without the possibility of end pressure switch connection. The pump is controlled from the machine or equipment control panel. Low level signalling is also connected to the machine control panel.

SAO 3P2, SAO 6P2, SAG 3P2, SAG 6P2
The external pressure switch is attached to the end of the lubricating circuit and can be connected to the control timer, which starts the individual lubricating cycles. The low-level signalling is connected to the control timer with the possibility of a remote alarm, e.g., by connecting of an external signalling light.

SAO 3P3, SAO 6P3, SAG 3P3, SAG 6P3
A variant without control timer, pressure switch is built into the pump. Low level signalling is connected to the machine control panel.

SAO 3P4, SAO 6P4, SAG 3P4, SAG 6P4
A variant with control timer on which the operation and pause period is set. An internal pressure switch is built into the lubricating pump and is connected to the control timer. The control timer starts the individual lubricating cycles during the pump operation period. The low-level signalling is

connected to the control timer with the possibility of a remote alarm, e.g., by connecting an external signalling light.

SAO 3P5, SAO 6P5, SAG 3P5, SAG 6P5
A variant without control timer. The internal pressure switch and push button for the intermediate lubrication in built into the pump. This function enables the starting of lubricating cycles at any time during the pause period. Low level signalling is connected to the machine control panel.

SAO 3P6, SAO 6P6, SAG 3P6, SAG 6P6
A variant without control timer but with a built-in push button for intermediate lubrication without the possibility of end pressure switch connection. The pump is controlled from the machine or equipment control panel. Low level signalling is also connected to the machine control panel.

Table 2 SAO - FOR LUBRICATING OILS (reservoir volume 3 dm^3)

DESCRIPTION	CODE	TYPE	LUBRICANT	VOLTAGE
SAO 3P1	1008714	Without control timer, without pressure switch	oil	24 V DC
SAO 3P1	1008700	Without control timer, without pressure switch	oil	115 V AC
SAO 3P1	1008701	Without control timer, without pressure switch	oil	230 V AC
SAO 3P2	1808720	With control timer, without pressure switch	oil	24 V DC
SAO 3P2	1008702	With control timer, without pressure switch	oil	115 V AC
SAO 3P2	1008703	With control timer, without pressure switch	oil	230 V AC
SAO 3P3	1008716	Without control timer, with pressure switch	oil	24 V DC
SAO 3P3	1008704	Without control timer, with pressure switch	oil	115 V AC
SAO 3P3	1008705	Without control timer, with pressure switch	oil	230 V AC
SAO 3P4	1808722	With control timer, with pressure switch	oil	24 V DC
SAO 3P4	1008706	With control timer, with pressure switch	oil	115 V AC
SAO 3P4	1008707	With control timer, with pressure switch	oil	230 V AC
SAO 3P5	1008791	Without control timer, with pressure switch and intermediate lubrication	oil	24 V DC
SAO 3P5	1008708	Without control timer, with pressure switch and intermediate lubrication	oil	115 V AC
SAO 3P5	1008709	Without control timer, with pressure switch and intermediate lubrication	oil	230 V AC
SAO 3P6	1808719	Without control timer, with pressure switch, with intermediate lubrication	oil	24 V DC
SAO 3P6	1008735	Without control timer, with pressure switch, with intermediate lubrication	oil	115 V AC
SAO 3P6	1008736	Without control timer, with pressure switch, with intermediate lubrication	oil	230 V AC

Table 3 SAO – FOR LUBRICATING OILS (reservoir volume 6 dm^3)

DESCRIPTION	CODE	TYPE	LUBRICANT	VOLTAGE
SAO 6P1	1008757	Without control timer, without pressure switch	oil	24 V DC
SAO 6P1	1008745	Without control timer, without pressure switch	oil	115 V AC
SAO 6P1	1008746	Without control timer, without pressure switch	oil	230 V AC
SAO 6P2	1808724	With control timer, without pressure switch	oil	24 V DC
SAO 6P2	1008747	With control timer, without pressure switch	oil	115 V AC
SAO 6P2	1008748	With control timer, without pressure switch	oil	230 V AC
SAO 6P3	1008759	Without control timer, with pressure switch	oil	24 V DC
SAO 6P3	1008749	Without control timer, with pressure switch	oil	115 V AC
SAO 6P3	1008750	Without control timer, with pressure switch	oil	230 V AC
SAO 6P4	1808726	With control timer, with pressure switch	oil	24 V DC
SAO 6P4	1008751	With control timer, with pressure switch	oil	115 V AC
SAO 6P4	1008752	With control timer, with pressure switch	oil	230 V AC
SAO 6P5	1008769	Without control timer, with pressure switch and intermediate lubrication	oil	24 V DC
SAO 6P5	1008753	Without control timer, with pressure switch and intermediate lubrication	oil	115 V AC
SAO 6P5	1008754	Without control timer, with pressure switch and intermediate lubrication	oil	230 V AC
SAO 6P6	1008794	Without control timer with intermediate lubrication	oil	24 V DC
SAO 6P6	1008755	Without control timer with intermediate lubrication	oil	115 V AC
SAO 6P6	1008756	Without control timer with intermediate lubrication	oil	230 V AC

Table 4 SAG – FOR SOFT GREASES (reservoir volume 3 dm^3)

DESCRIPTION	CODE	TYPE	LUBRICANT	VOLTAGE
SAG 3P1	1008715	Without control timer, without pressure switch	grease	24 V DC
SAG 3P1	1008720	Without control timer, without pressure switch	grease	115 V AC
SAG 3P1	1008721	Without control timer, without pressure switch	grease	230 V AC
SAG 3P2	1808721	With control timer, without pressure switch	grease	24 V DC
SAG 3P2	1008722	With control timer, without pressure switch	grease	115 V AC
SAG 3P2	1008723	With control timer, without pressure switch	grease	230 V AC
SAG 3P3	1008717	Without control timer, with pressure switch	grease	24 V DC

SAG 3P3	1008724	Without control timer, with pressure switch	grease	115 V AC
SAG 3P3	1008725	Without control timer, with pressure switch	grease	230 V AC
SAG 3P4	1808723	With control timer, with pressure switch	grease	24 V DC
SAG 3P4	1008726	With control timer, with pressure switch	grease	115 V AC
SAG 3P4	1008727	With control timer, with pressure switch	grease	230 V AC
SAG 3P5	1008792	Without control timer, with pressure switch	grease	24 V DC
SAG 3P5	1008728	Without control timer, with pressure switch	grease	115 V AC
SAG 3P5	1008729	Without control timer, with pressure switch	grease	230 V AC
SAG 3P6	1008799	Without control timer, with intermediate lubrication	grease	24 V DC
SAG 3P6	1008739	Without control timer, with intermediate lubrication	grease	115 V AC
SAG 3P6	1008740	Without control timer, with intermediate lubrication	grease	230 V AC

Table 5 SAG – FOR SOFT GREASES (reservoir volume 6 dm^3)

DESCRIPTION	CODE	TYPE	LUBRICANT	VOLTAGE
SAG 6P1	1008758	Without control timer, without pressure switch	grease	24 V DC
SAG 6P1	1008770	Without control timer, without pressure switch	grease	115 V AC
SAG 6P1	1008771	Without control timer, without pressure switch	grease	230 V AC
SAG 6P2	1808725	With control timer, without pressure switch	grease	24 V DC
SAG 6P2	1008772	With control timer, without pressure switch	grease	115 V AC
SAG 6P2	1008773	With control timer, without pressure switch	grease	230 V AC
SAG 6P3	1008768	Without control timer, with pressure switch	grease	24 V DC
SAG 6P3	1008774	Without control timer, with pressure switch	grease	115 V AC
SAG 6P3	1008775	Without control timer, with pressure switch	grease	230 V AC
SAG 6P4	1808727	With control timer, with pressure switch	grease	24 V DC
SAG 6P4	1008776	With control timer, with pressure switch	grease	115 V AC
SAG 6P4	1008777	With control timer, with pressure switch	grease	230 V AC
SAG 6P5	1008793	Without control timer, with pressure switch and intermediate lubrication	grease	24 V DC
SAG 6P5	1008778	Without control timer, with pressure switch and intermediate lubrication	grease	115 V AC
SAG 6P5	1008779	Without control timer, with pressure switch and intermediate lubrication	grease	230 V AC

SAG 6P6	1008798	Without control timer, with intermediate lubrication	grease	24 V DC
SAG 6P6	1008780	Without control timer, with intermediate lubrication	grease	115 V AC
SAG 6P6	1008781	Without control timer, with intermediate lubrication	grease	230 V AC

Basic variant of lubrication pump SAO, SAG is without the gauge. Upon request the code of gauge is 1463000, 0 – 60 bar, G1/8“.

7 DIMENSION DRAWING

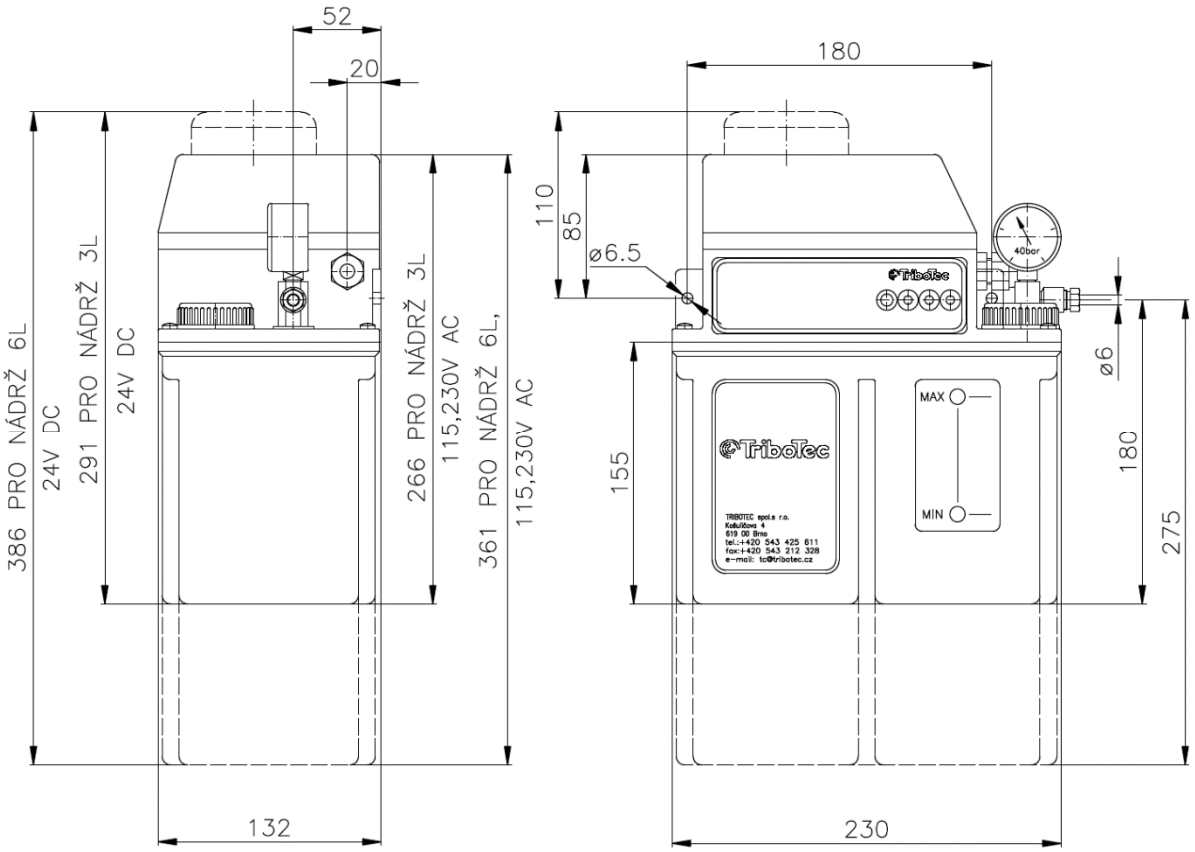

Fig. 1 Dimension drawing

8 HYDRAULIC DIAGRAM

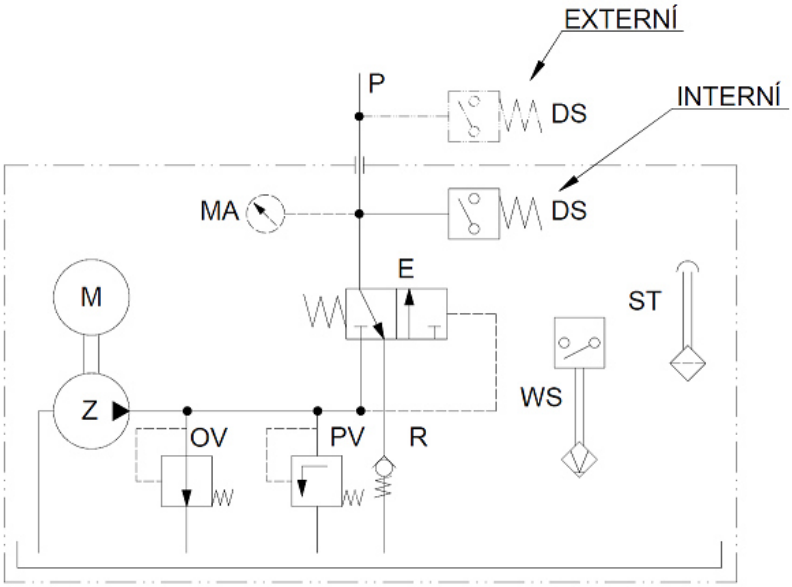

Fig. 2 Hydraulic diagram

Table 6 Hydraulic diagram description

Z	Gear pump
M	Electric motor
PV	Safety valve
E	Change-over valve
R	Relieve valve
DS	Pressure switch
MA	Gauge
P	Outlet fitting
WS	Electric level sensor
ST	Filling lid
OV	Pressure relieves valve of change-over valve

9 INSTALLATION AND GETTING INTO OPERATION

Notice:
The assembly and electrical connection of the unit may only be carried out by trained personnel who are familiar with the regulations.
Before removing the plastic cover from the lubrication unit, the supply voltage must be disconnected when adjusting the automatic control system.
Regularly fill the lubrication unit tank with clean grease.

SAO, SAG lubrication units are mounted in a horizontal position and attached to the wall of the machine or equipment. Two anchor holes with 6.5 mm diameter are prepared for fixing the units.
After mounting the unit at the selected location and connecting the outlet to the lubrication circuit piping, the tank is filled with the prescribed lubricant. The outlet is designed for connection to pipe of diam. 6 mm (pipe with an outer diameter of 6 mm), the outlet for connection to pipe of diameter 8 mm or another diameter must be specified in the equipment.
The electrical connection of the unit is made according to the diagram that belongs to the given design of the lubrication unit.

10 ELECTRIC WIRING, ELECTRICAL CONNECTION

10.1 SAO P1, SAG P1

Version without automatic control and without internal pressure switch.
The unit is controlled from the control panel of the machine or equipment. The level indicator for signalling min. level is connected to the machine control panel.

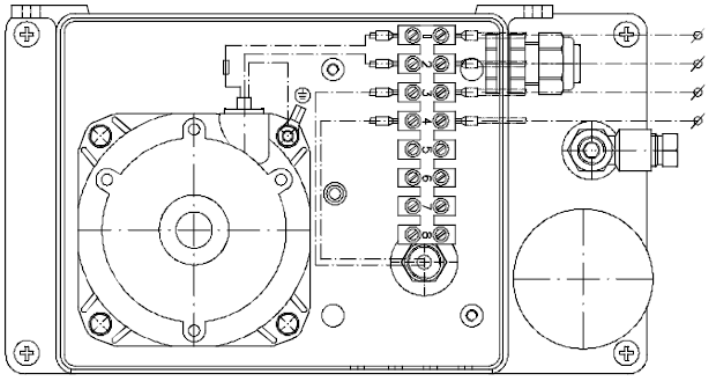

Fig. 3 SAO P1, SAG P1

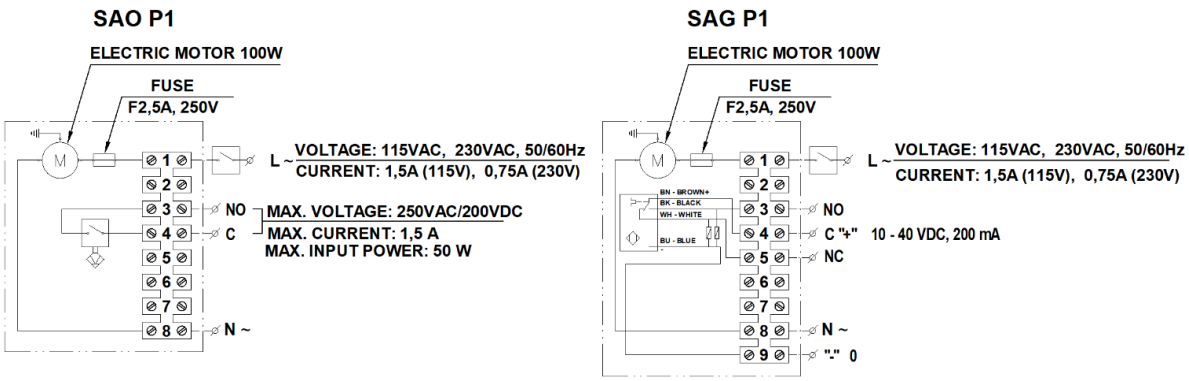

Fig. 4 SAO P1, SAG P1 connection

10.2 SAO P2, SAG P2

Version with the control timer, without an internal pressure switch.

The external pressure switch is located at the end of the lubrication circuit and can be connected to the control timer, which starts the individual lubrication cycles. The level indicator is internally connected to the control timer with the possibility of remote alarm connection, e.g., by connecting an external signal light, horn, etc.

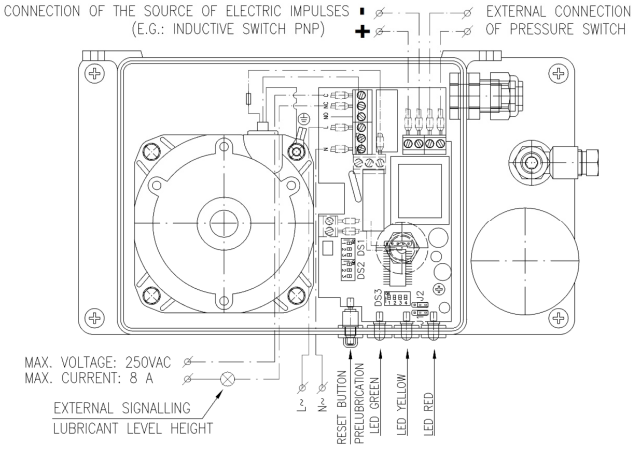

Fig. 5 SAO P2, SAG P2

Green LED pilot light: lighting - connected voltage
Yellow LED pilot light: lighting - unit running

Red LED pilot light: flashing - lack of lubricant in the tank
lighting - the lubrication circuit line is cut off, the working pressure has not risen to the value of the switching pressure of the pressure switch

Pressing the intermediate lubrication button on the unit panel, during the pause interval, an extraordinary pre-lubrication of the points in the circuit is getting into operation, in the form of one lubrication cycle, in which the inspection of the working pressure and the lubricant level in the reservoir is also performed. Finally, the break time is automatically reset. Manual button between lubrication must always be used after refilling the lubricant in the tanks, if it has fallen below the minimum level and the minimum level alarm has been triggered (flashing LED), or in case of repair of the lubrication circuit after the pressure switch alarm (steady LED).

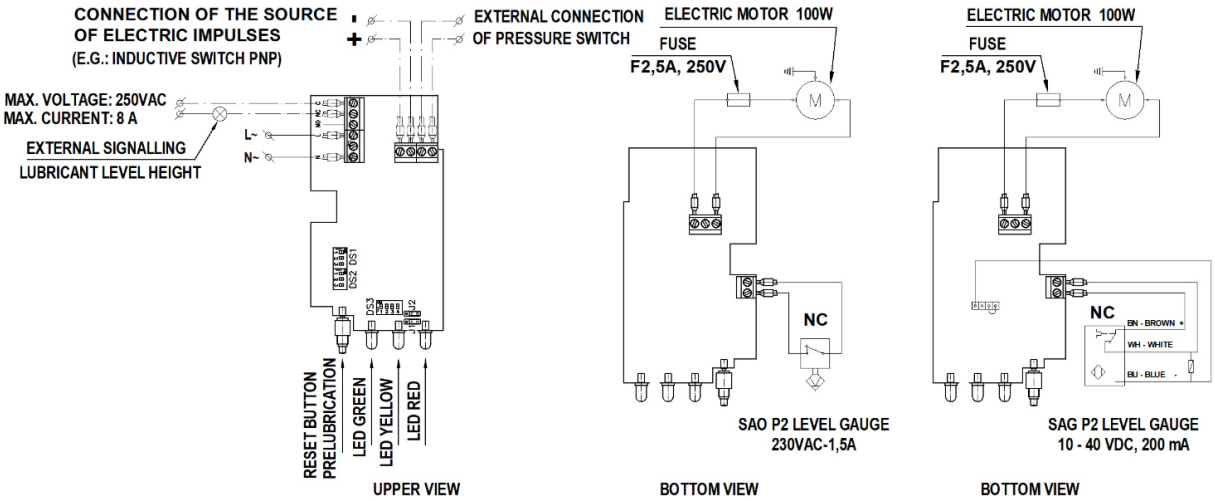

Fig. 6 Connection SAO P2, SAG P2

10.3 SAO P3, SAG P3

Version without automatic control, the pressure switch is built into the unit. The aggregate is controlled from the control panel of the machine or device. Level gauge for signalling min. level is connected to the control panel of the machine.

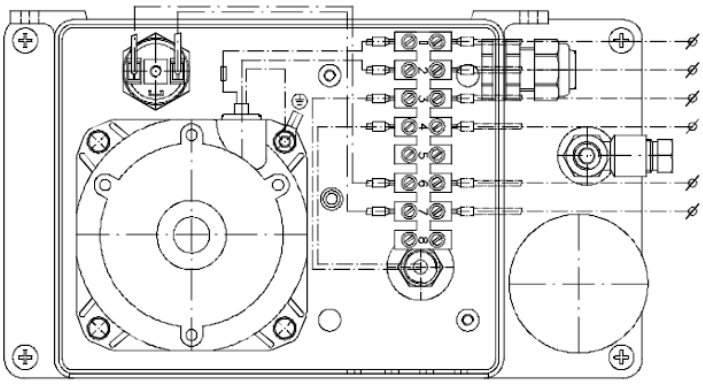

Fig. 7 SAO P3, SAG P3

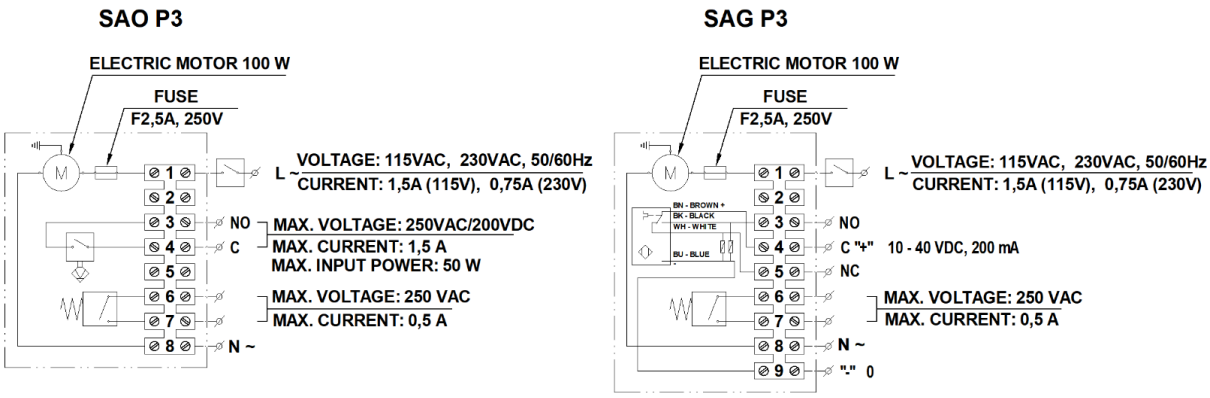

Fig. 8 Wiring connection SAO P3, SAG P3

10.4 SAO P4, SAG P4

Version with control automation and an internal pressure switch, connected to the control automation, which starts individual lubrication cycles. The level gauge is internally connected to the control system with the possibility of remote alarm connection, e.g., by connecting an external signalling light, horn, etc.

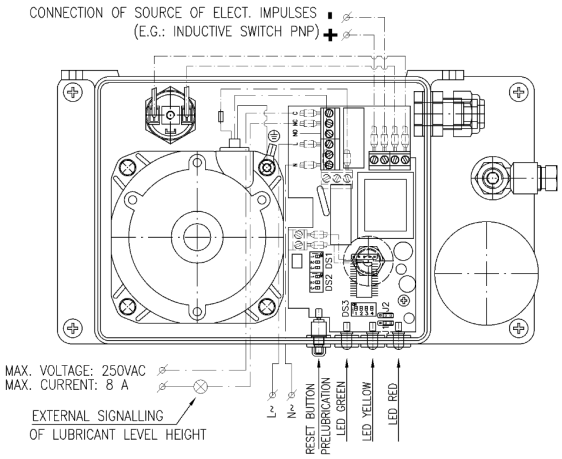

Fig. 9 SAO P4. SAG P4

Green LED pilot light: lighting - connected voltage
Yellow LED pilot light: lighting - unit running
Red LED pilot light: flashing - lack of lubricant in the tank
lighting - the lubrication circuit line is cut off, the working pressure has not risen to the value of the switching pressure of the pressure switch

Pressing the intermediate lubrication button on the unit's panel during a break will start additional lubrication of the lubricated parts in the circuit, one lubrication cycle, during which the working pressure and lubricant level in the unit's tanks will also be checked. Finally, the loaded break time will be automatically reset. The intermediate lubricate manual button must be used every time after refilling the lubricant in the tanks, if it has dropped below the minimum level and the minimum level alarm has been triggered (flashing LED light), or in the case of repair of the lubrication circuit after pressure, the alarm switch (still lit LED light).

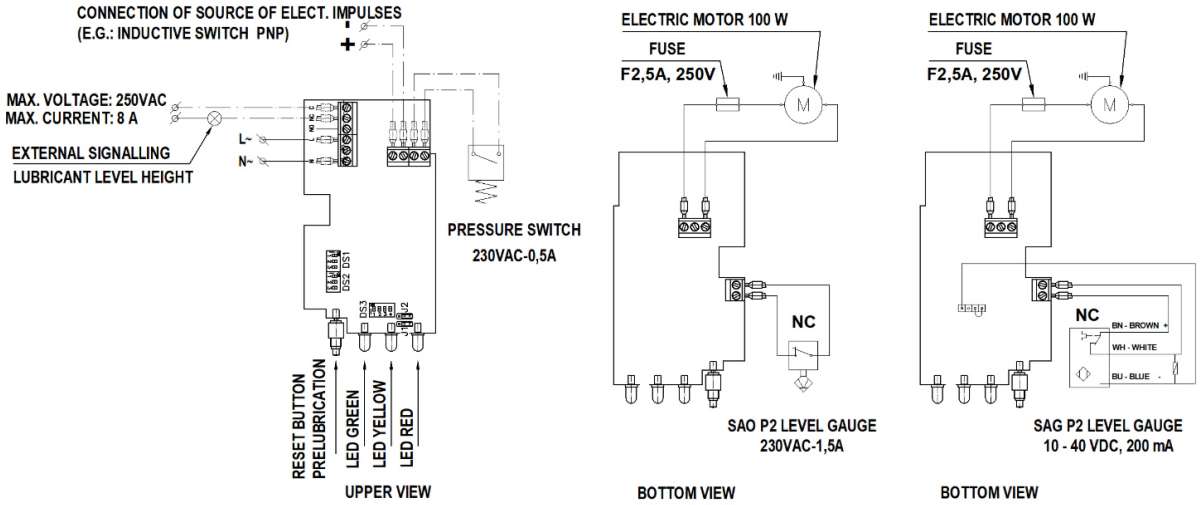

Fig. 10 Wiring connection SAO P4, SAG P4

10.5 SAO P5, SAG P5

Version without automatic control. An internal pressure switch and a button for the intermediate lubrication function are built into the unit. This function makes it possible to lubricate the machine at any time. The aggregate is controlled from the control panel of the machine or device. The level gauge for signalling the minimum level is connected to the control panel of the machine.

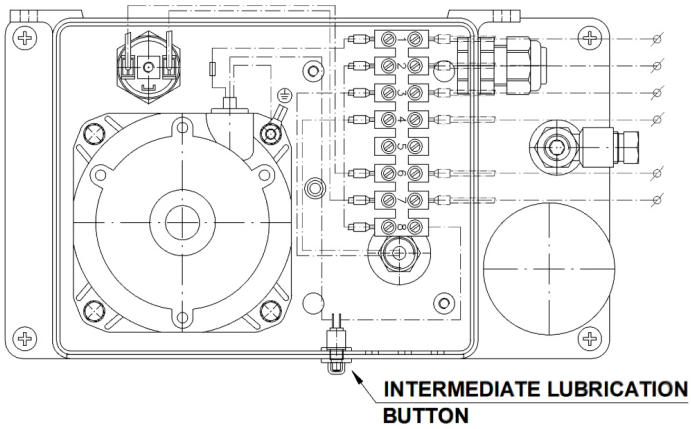

INTERMEDIATE LUBRICATION BUTTON

Fig. 11 SAO P5, SAG P5

By pressing the intermediate lubrication button on the unit panel, an extraordinary lubrication of the lubricated points in the circuit is started during the break, one lubrication cycle, during which the working pressure and lubricant level in the unit tank are also checked. The manual intermediate lubrication button must always be used after refilling the lubricant in the tank, if it has dropped below the minimum level and the minimum alarm has been triggered, or in the case of repair of the lubrication circuit after a pressure alarm.

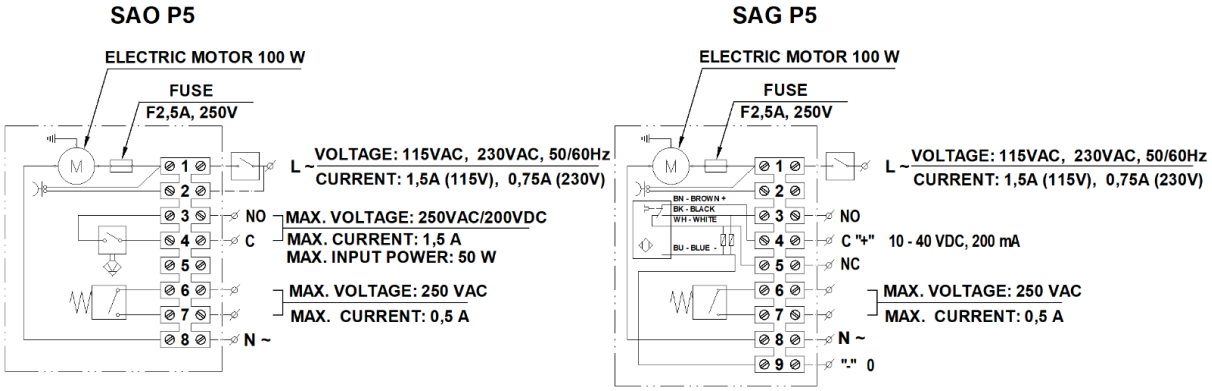

Fig. 11 Wiring connection SAO P5, SAG P5

10.6 SAO P6, SAG P6

Version without automatic control and pressure switch. It is equipped with an intermediate lubrication function. The aggregate is controlled from the control panel of the machine or device. The level gauge for signalling the minimum level is connected to the control panel of the machine.

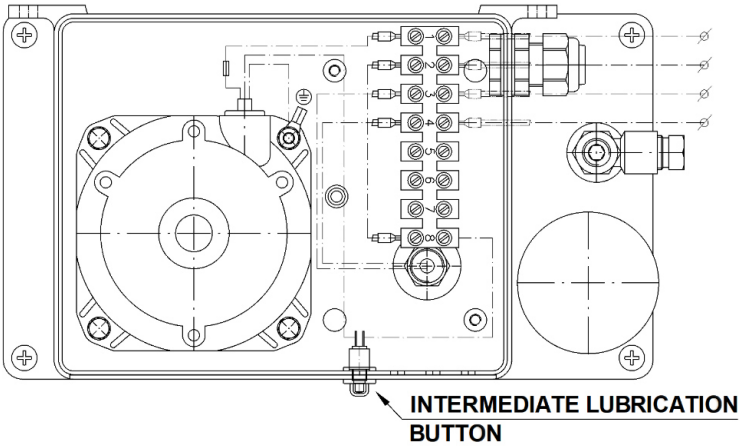

Fig. 12 SAO P6, SAG P6

By pressing the intermediate lubrication button between on the unit panel, an extra lubrication of the lubricated parts in the circuit is started during the break period, one lubrication cycle, during which the working pressure and lubricant level in the unit tanks are also checked. The manual intermediate button must always be used after refilling the lubricant in the tanks, if it has dropped below the minimum level and the minimum alarm has been triggered, or in case of repair of the lubrication circuit after a pressure alarm.

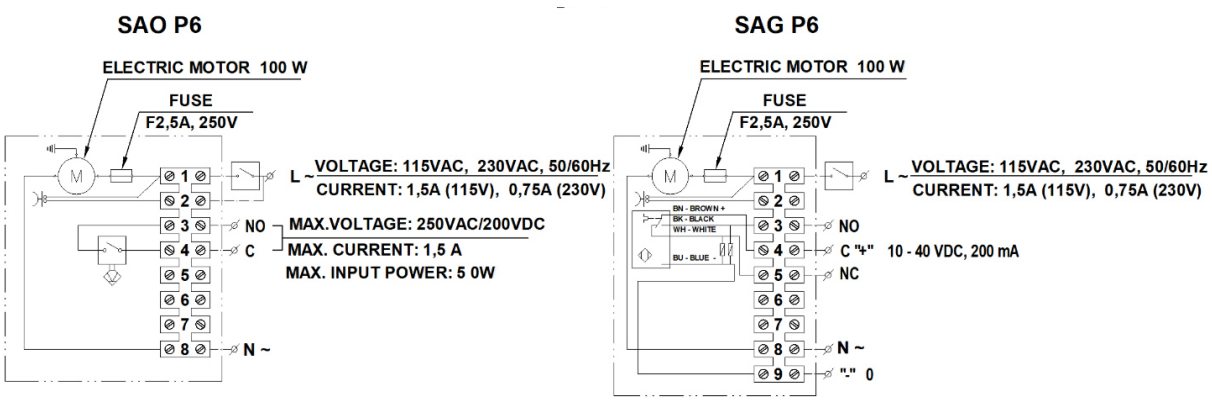

Fig. 13 Wiring connection SAO P6, SAG P6

10.7 CONNECTING THE LEVEL GAUGE

10.7.1 OIL

- Standard version

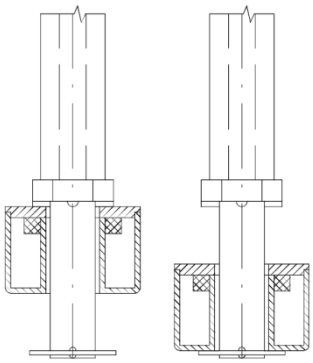

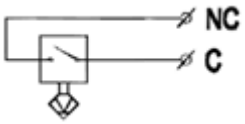

Max. voltage: 250VAC/200VDC
Max. current: 1,5A
Max. input power: 50W

Fig. 14 Wiring connection of float standard version

Fig. 15 Standard version of float position

In the standard version, the level gauge signals a drop below the minimum level.

10.7.2 OIL

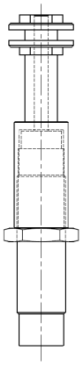

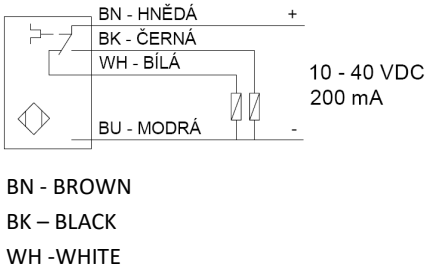

Fig. 17 Capacitive level gauge

Fig. 16 Standard wiring connection of capacitive level gauge

In the standard version, the level gauge signals a drop below the minimum level.

11 SETTING WORKING PATAMETERS

The control automation performs automatic switching on and off of the electric motor of the aggregate during the set lubrication cycles, which remain from the lubrication time and the lubrication break time. In addition, it evaluates the status of the working pressure of the lubricants in the circuit, and provides information on the status of the minimum level of lubricants in the tanks.
Setting the lubrication cycles on the automatic control unit is done before connecting the aggregate under voltage to the electrical network and after dismantling the plastic cover of the tank lid by choosing the combination of the contact positions of the three switches on the automatic control unit.
The duration of the lubrication break can be set in a wide range in two modes, namely in the time mode, when we choose the length of the break in minutes and hours, or in pulses, when the break period consists of the time in which the control automation receives the setting of the number of voltage pulses from an external pulse source, for example from inductive switches.

The values of the lubrication time and the break time are set step by step.
The lubrication time can be selected from 8-time values in the range from 5s to 90s on the DS2 switch.
The break time can be set using a combination of switches DS1 and DS3, the length of the break is the value next to the scheme of the switch DS1 in the range of 1 min to 1000 min or 1 hour to 21 hours.
All setting options are shown in Figure 19 and 21.

LUBRICATION	TIME OF PAUSE				
[seconds]	[minutes]				[hours]
	SWITCH DS 3	SWITCH DS 3	SWITCH DS 3	SWITCH DS 3	SWITCH DS 3
SWITCH DS2	SWITCH DS 1	SWITCH DS 1	SWITCH DS 1	SWITCH DS 1	SWITCH DS 1
5	1	2,5	5	20	1
10	2	3	10	40	3
15	4	5	15	60	6
20	8	7	20	80	9
30		10	40	160	12
40		20	80	320	15
60		40	160	640	18
90		80	250	1000	21

LUBRICATION	TIME OF PAUSE				
[seconds]	[number of impulses]				
	SWITCH DS 3	SWITCH DS 3	SWITCH DS 3	SWITCH DS 3	SWITCH DS 3
SWITCH DS2	SWITCH DS 1	SWITCH DS 1	SWITCH DS 1	SWITCH DS 1	SWITCH DS 1
5	2	5	10	40	120
10	4	6	20	80	360
15	8	10	30	120	720
20	16	14	40	160	1080
30		20	80	320	1440
40		40	160	640	1800
60		80	320	1280	2160
90		160	500	2000	2520

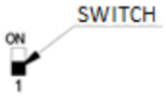

Fig. 18 Lubrication and pause interval setting – time mode

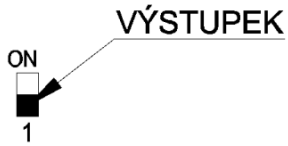

Fig. 19 Protruding button

Figure 21 Setting the erase time and break - pulse mode

Example:
deletion time - 15 [s] - switch DS2
break time - 10 [min] - combination of switches DS3 and DS1 in one column

Figure 22 Switch settings

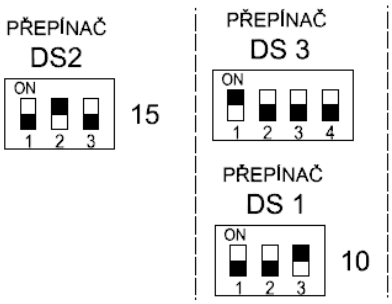

The selection of lubrication time or the selection of a break at the beginning of the lubrication cycle can be set with jumper J1:

- the lubrication cycle begins with the lubrication period  J1

- the lubrication cycle begins with a break period  J1

The red LED light informing about the achievement of the working pressure during the lubrication period is connected to the jumper (bridge) J2. In the event that the jumper is not connected and the lubrication circuit becomes impassable, the control automation will not evaluate this condition as a fault, the lubrication will not be interrupted and the lubrication cycles will take place at the set times. The grease supplied by the gear pump will return to the tank through the safety valve, overloading the electric motor and overheating.

- connected LED light (red) to check the connection of the pressure switch (internal or external)  J2

- disconnected LED light (red) to check the connection of the pressure switch (internal or external)  J2

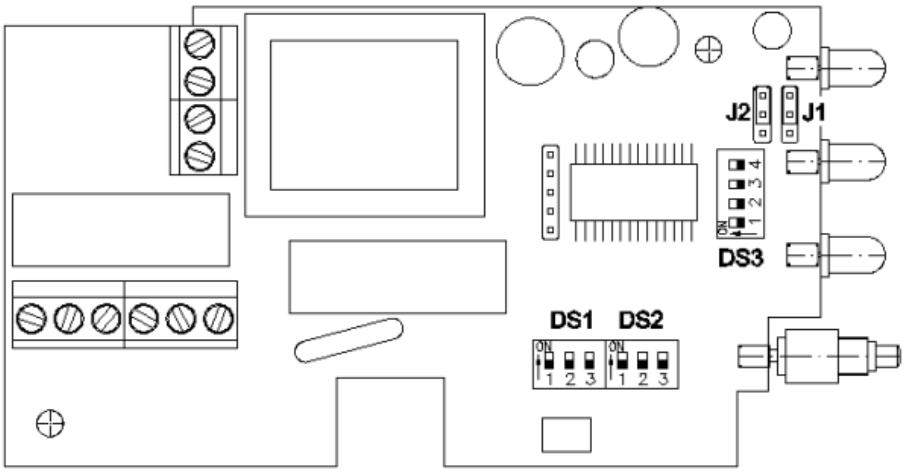

Figure 23 Layout of switches

For lubrication circuits with a longer break period selected, the function of the intermediate lubrication mode can be used. In this mode, by pressing a button on the unit panel, during the break period, extraordinary lubrication of the lubricated points in the circuit can be started, one lubrication cycle, during which the working pressure and lubricant level in the unit tank are also checked. At the same time, the loaded break time will be automatically reset. The manual intermediate lubrication button must always be used after topping up the lubricant in the tank, if it has dropped below the minimum level and the minimum level alarm has been triggered (flashing LED light), or in case of repair of the lubrication circuit after a pressure switch alarm (solid LED light).
For SAO P2, SAG P2 versions that are not equipped with an internal pressure switch, it is necessary to properly connect the external pressure switch to the control system. If the pressure switch is not connected and jumper J2 on the automatic control is in the "connected" position, at the end of the lubrication period, a malfunction is signalled by a permanently lit red LED, with the simultaneous stop of the next lubrication run.
We return the automatic control to normal mode by pressing the manual button on the panel, after which one lubrication period will take place and the set lubrication cycles will continue. The control automation is not equipped with a fixed memory, therefore, when the voltage is interrupted, the loaded break time is reset to zero.
SAO P4, SAG P4 lubrication aggregates are equipped with a pressure switch and the same applies to them as for SAO P2 and SAG P2 aggregates.
It is possible to connect external signalling of the state of the minimum oil level in the tank to the automatic control. Since the output of this signalling is switched via a relay, it is possible to connect the machine shutdown to this output.

For the proper functioning of the lubrication unit, the lubrication circuit must be completely vented, it is also necessary to maintain the required cleanliness of the pipeline, i.e., remove burrs and other dirt from the pipe before assembly.

12 BASIC SETTINGS

The basic automatic setting depends on the working conditions of the lubrication units.

13 MAINTENANCE AND INSPECTION

With the exception of timely replenishment of lubricant and cleaning of the suction basket approximately twice a year, the lubrication unit does not require additional maintenance or service.

14 ACCESSORIES

SAO, SAG lubrication units do not require any special accessories for installation, operation or maintenance.

15 WORK SAFETY

The electrical connection must be carried out professionally in compliance with the relevant safety regulations. The customer is responsible for professionally performed and correct installation.

16 STORAGE AND TRANSPORT

When storing customers, observe the product conditions according to the set of IE11 class combinations according to ČSN EN 60721-3-1 (temperature range +5°C to +40°C, relative humidity range 5 to 85%) and the transport conditions of the IE21 class combination according to ČSN EN 60721- 3- 2 (temperature range -25°C to 60°C, relative humidity 75%). The customer is responsible for storing the product after delivery.
Products must be repaired in protective packaging. For lubricating SAO, SAG, you can use an aggregate normally packaged in cardboard boxes filled with crushed polystyrene or similar protection against mechanical damage. In the means of transport, the products must be stored in such a way that the possibility of mechanical loading by stacking, damage due to shocks and weather effects during transport is excluded. Loading and unloading must be done carefully to prevent the mechanical shipment from falling.

17 QUALITY AND GURANTEE

TRIBOTEC warrants that all products manufactured by TRIBOTEC will be of simple material and workmanship on the date of sale by TRIBOTEC to the original purchaser of these products.

With the offer of a special, extended or safety warranty, published by TRIBOTEC, TRIBOTEC will repair or replace for a period of six (6) months from the date of sale any product that TRIBOTEC confirms is defective.

This warranty applies only if the products are installed, operated and maintained in accordance with the written instructions and requirements contained herein.

This warranty does not cover, and TRIBOTEC will not be responsible for, normal wear and tear of the product. In addition, a defect in the product, its damage or damage caused by the following will not be detected:

1. faulty installation (if delivery is not directly from TRIBOTEC),
2. improper use, i.e., use and operation under other than specified operating conditions,
3. use for other than recommended purposes,
4. abrasion,

5. pollutants or debris,
6. corrosion caused by installation in a different than recommended working environment,
7. inadequate or inappropriate maintenance,
8. damage due to negligence, accident or intentional damage,
9. using spare parts not supplied by TRIBOTEC,
10. additional installation of parts and components not supplied or not approved by TRIBOTEC,
11. incompatibility of the TRIBOTEC product with equipment, accessories or materials not supplied by TRIBOTEC, or their incorrect design, production, installation or maintenance.

THIS WARRANTY IS EXCLUSIVE AND IS IN LIEU OF ANY OTHER WARRANTIES, WHETHER EXPRESS OR IMPLIED, INCLUDING, BUT NOT LIMITED TO, WARRANTIES OF MERCHANTABILITY OR FITNESS FOR A PARTICULAR PURPOSE.

TRIBOTEC shall in no way be liable for indirect, incidental, force majeure or consequential damages and losses resulting from TRIBOTEC supplying the products.

18 POSSIBLE FAILURES AND THEIR REMOVING

Table 7: Faults and their elimination

FAULT	PROBABLE CAUSE	TROUBLESHOOTING
The unit does not supply lubricant at the required pressure	Lack of lubricant in the tank	Fill the tank
	Dirty suction filter	Replace the pump
	Worn gear pump	Tighten the screw connection
	Loose internal screw connection	Tighten the screw connection
	Dirty valves	Remove and clean
The unit does not supply lubricant at the required pressure	Damaged work cuff	Replace the work cuff
	Worn gear pump	Replace the pump
Relief valve se does not open at the end of time lubrication	Dirty relief valve	Remove and clean
The red LED is flashing	Lack of lubricant in the tank	Fill the tank, press the button after filling the tank intermediate lubrication
The red LED light is on	Interrupted line of the lubrication circuit, the working pressure in the lubrication circuit did not match the value of the switching pressure of the pressure switch	Checking the condition of the pipes. After checking and correcting, press the button between delete

19 APPENDICES

No. 1 Overall assembly of the lubrication unit
No. 2 Spare parts

24 V DC

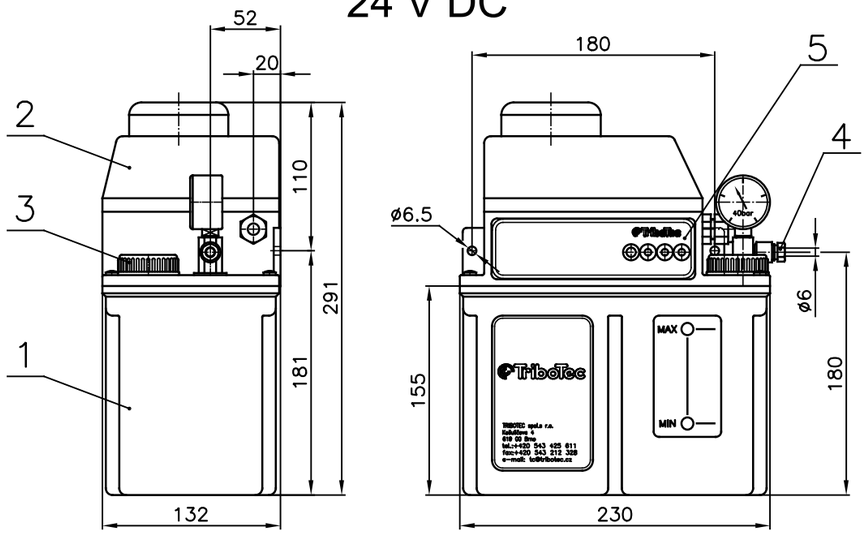

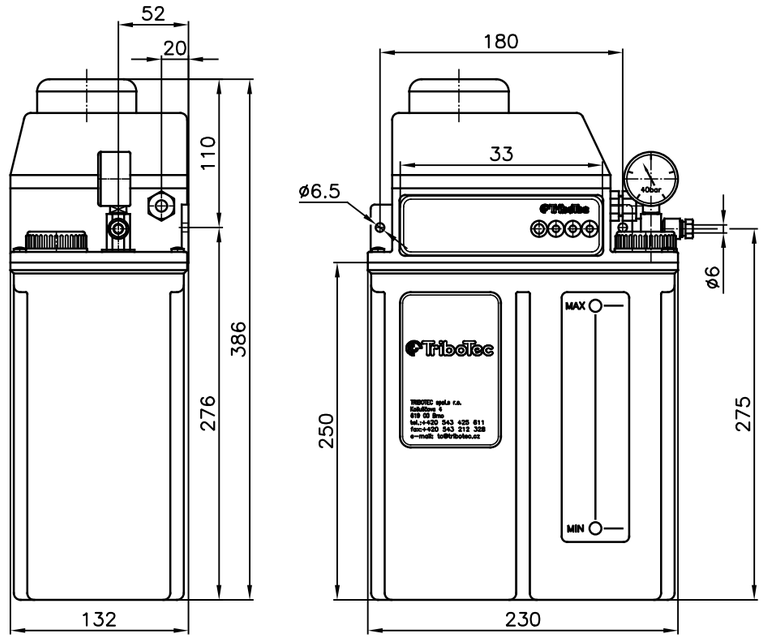

115 V AC, 230 V AC

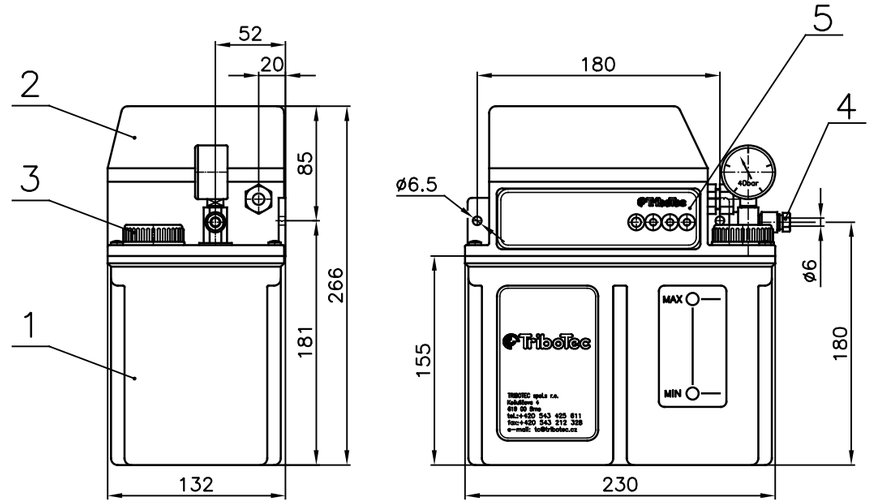

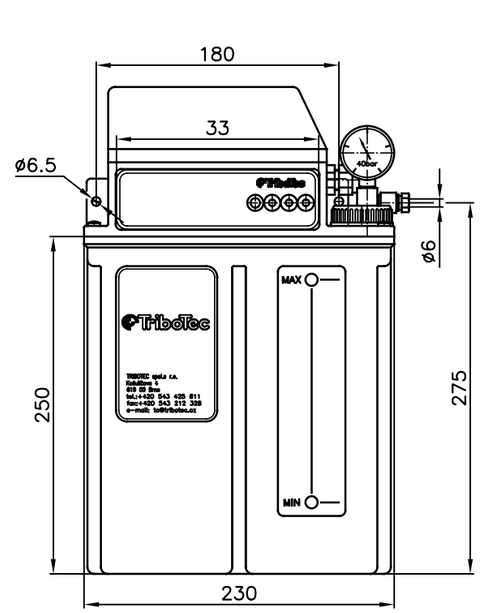

Poz.	Název	Name
1	Zásobník maziva	Lubricant tank
2	Víko	Cover
3	Plnící otvor	Filling hole
4	Vývodní šroubení	Outlet pipe union
5	Ovládací panel	Control panel

Název/Name	MAZACÍ AGREGÁT / LUBRICATION PUMP	TriboTec s.r.o.
Typ/Type	SAO, SAG	Košuličova 4 Brno www.tribotec.cz +420 543 212 328
Kód/Code		

19.1 SAO,SEG SPARE PARTS

Item	Description	Identification number
1	Electric motor 115 V AC, 50/60Hz	1950303
2	Electric motor 230V AC, 50/60Hz	1950304
3	Plastic cover	1920322
4	Reservoir cover	1920323
5	Control timer 115 V AC	1911070
6	Control timer 230V AC	1911071
7	Manometer 0 - 60 bars	1463000
8	Plastic reservoir 3 dm^3	1929012
9	Plastic reservoir 6 dm^3	1929051
10	Float level indicator3 dm^3 (SAO)	1994023
11	Float level indicator 6 dm^3 (SAO)	1994035
12	Capacitive level indicator3 dm^3 (SAG)	1993131
13	Capacitive level indicator 6 dm^3 (SAG)	1994036
14	Gear pump	1005405
15	Pressure switch "NO" 22 bars	1490627
16	Pressure relief valve	1975003
17	Change-over valve	1975006
18	Safety valve 24 bars	1975008
19	Safety valve 30 bars	1975007
20	Closing plug with strainer	1993164